YARD FORCE
LAWN & GARDEN EQUIPMENT

EW U13

Q1W-SP09-1800

GB

1800W HIGH PRESSURE WASHER

Original Instructions

READ & UNDERSTAND INSTRUCTION MANUAL

Save all warnings and instructions for future reference.

Service centre: +44(0)1904727513
Mail: support@yardforce.co.uk
Web: www.yardforce.co.uk

SUMEC UK
UNIT A&B ESCRICK BUSINESS PARK
ESCRICK, YORK
YO19 6FD

Read this manual carefully prior to assembling and operating the pressure washer. It is dangerous to operate this product without being familiar with these instructions. Keep this manual in a safe place and have it ready for future reference.

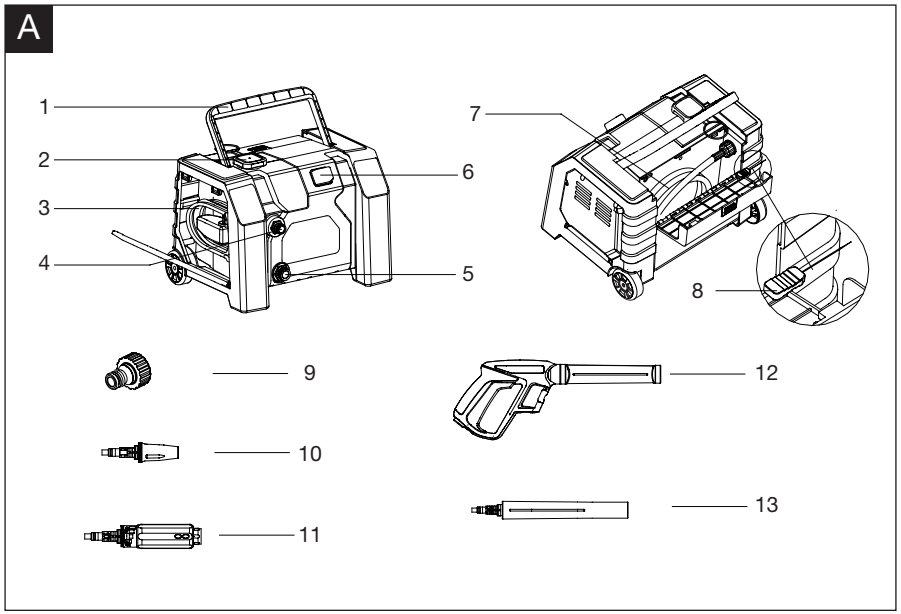

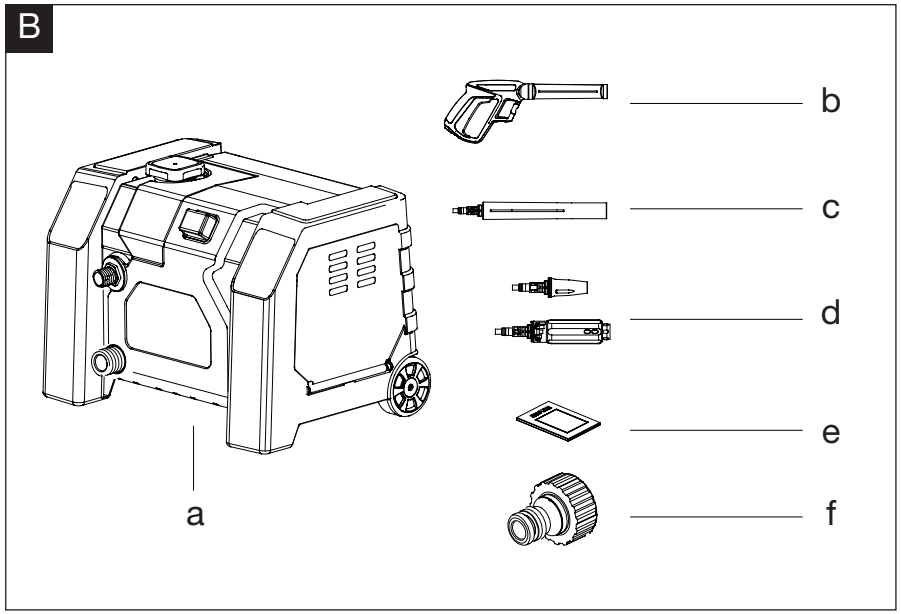

C

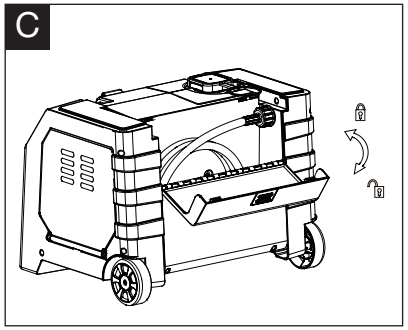

D

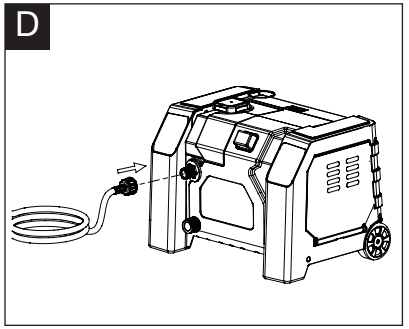

E

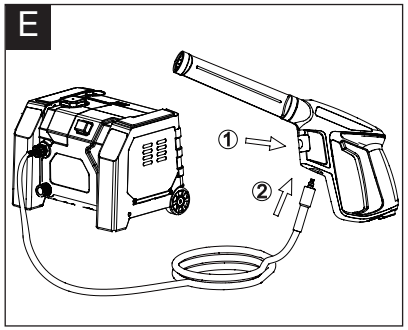

F

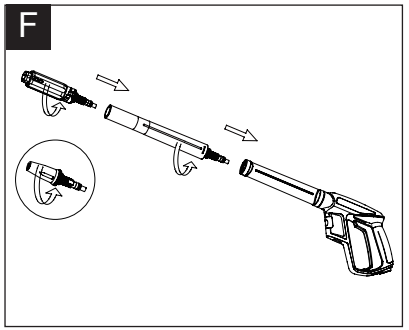

G

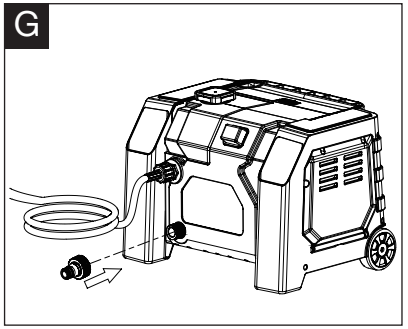

H

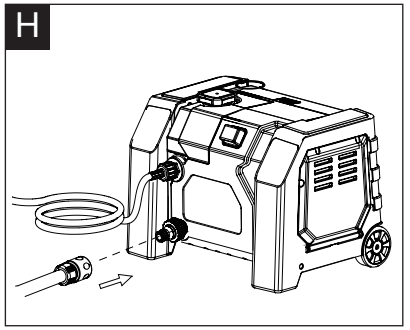

I

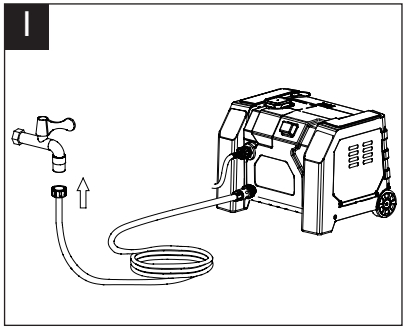

J

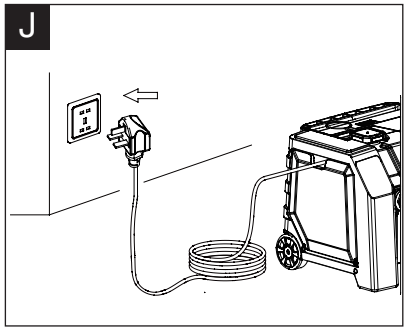

K

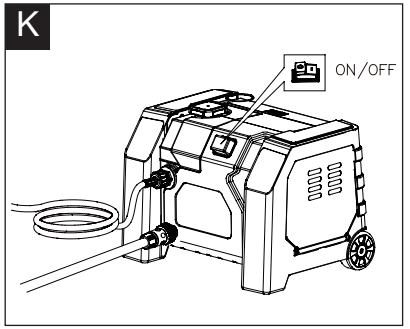

L

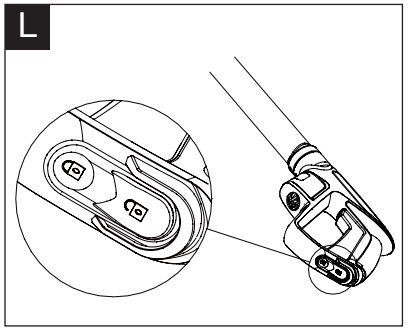

M

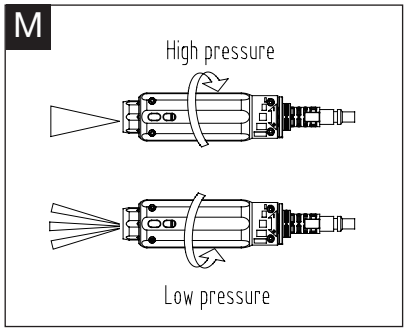

N

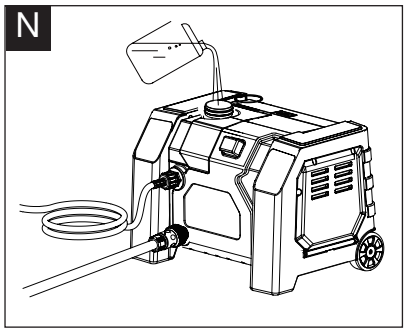

O

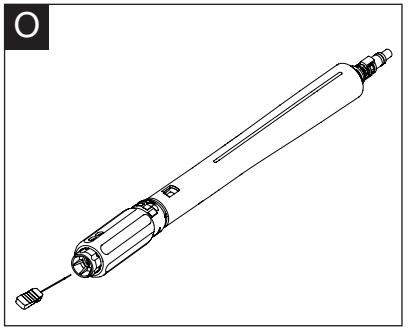

YARD FORCE

EW U13 Original Instruction

CONTENT

Intended use	07
General safety warnings	07
Product safety warnings	10
Symbols	16
Technical data	19
Description of product	20
Installation	21
Operation	22
Maintenance and storage	24
Troubleshooting	25
CE declaration	27

INTENDED USE

The machine is intended for cleaning the walls of buildings, facades, terraces, footpaths, garden equipment, machinery, vehicles and tools.

If required, you can also use the machine with added household cleaning agents.
The machine is to be used only for its prescribed purpose. Any other use is deemed to be a case of misuse. The user/operator and not the manufacturer will be liable for any damages or injuries of any kind caused as a result of misuse.

Please note that our equipment has not been designed for use in commercial, trade or industrial applications. Our warranty will be voided if the machine is used in commercial, trade or industrial businesses or for equivalent purposes.

GENERAL SAFETY WARNINGS

Read the following safety instructions to prevent damage or injury to persons or property.

IMPORTANT SAFETY INSTRUCTIONS
READ ALL INSTRUCTIONS BEFORE USING THIS APPLIANCE

WARNING: When using this product basic precaution should always be followed, including the following:

- Machines should not be used by children. Children should be supervised to ensure that they do not play with the machine.
- This machine can be used by people with reduced physical, sensory or mental capabilities or lack of experience and knowledge only if they have been given supervision or instruction concerning use of the machine in a safe way and understand the hazards involved.
- If the supply cord is damaged, it must be replaced by the manufacturer, its service agent or similarly qualified persons in order to avoid a hazard.

- The electric supply connection should be made by a qualified electrician and comply with IEC 60364-1. It is recommended that the electric supply to this machine should include either a residual current device that will interrupt the supply if the leakage current to earth exceeds 30 mA for 30ms or a device that will prove the earth circuit.
- **WARNING:** This machine has been designed for use with the cleaning agent supplied or recommended by the manufacturer. The use of other cleaning agents or chemicals may adversely affect the safety of the machine.
- **WARNING:** High pressure jets can be dangerous if subject to misuse. The jet must not be directed at other people, live electrical equipment or the machine itself.
- **WARNING:** Do not use the machine within range of people unless they are wearing protective clothing.
- **WARNING:** Do not direct the jet against yourself or others in order to clean clothes or footwear.
- **WARNING:** Risk of explosion - Do not spray flammable liquids.
- **WARNING:** High pressure cleaners should not be used by children or untrained personnel.
- **WARNING:** High pressure hoses, fittings and couplings are important for the safety of the machine. Use only hoses, fittings and couplings recommended by the manufacturer.
- **WARNING:** To ensure the machine is safe, use only original spare parts from the manufacturer or approved by the manufacturer.

- **WARNING:** Water that has flowed through backflow preventers is considered to be undrinkable .
- **WARNING:** The machine should be disconnected from its power source during cleaning or maintenance and when replacing parts or converting the machine to another function by removing the plug from the socket-outlet.
- **WARNING:** Do not use the machine if a supply cord or important parts of the machine are damaged, e.g. safety devices, high pressure hoses or the trigger gun.
- **WARNING:** Inadequate extension cords can be dangerous. If an extension cord is used, it should be suitable for outdoor use and the connection has to be kept dry and off the ground. It is recommended that this is accomplished by means of a cord reel which keeps the socket at least 60 mm above the ground.
- **WARNING:** Always switch off the mains connecting switch when leaving the machine unattended.
- **WARNING:** Always wear appropriate personnel protection equipment (PPE) when using the machine, e.g. safety boots, safety gloves, safety helmets with visors, hearing protection.
- **WARNING:** The new hose-sets supplied with the appliance are to be used. Old hose-sets should not be reused.
- **WARNING:** In the event detergent spills or makes contact with skin, wash with water. If liquid makes contact with eyes, seek medical help.

SAVE THESE INSTRUCTIONS FOR FUTURE REFERENCE

WARNING! When using the product the safety rules must be followed. For your own safety and that of others please read these instructions before operating the product. Please keep the instructions safe for later use.

Training

- Read the instructions carefully and ensure that you are familiar with the controls and the proper use of the product.
- Never allow people unfamiliar with these instructions or children to use the product. Local regulations can restrict the age of the operator.
- Keep in mind that the operator or user is responsible for accidents or hazards occurring to other people or their property.
- **WARNING:** Water that has flowed through backflow preventers is considered to be undrinkable.
- **WARNING:** Risk of explosion – Do not spray flammable liquids.
- Do not use the equipment near flammable liquids or gases, this will reduce the risk of fire or explosion.

Preparation

- Never operate the product while other people, especially children and pets are nearby.
- **WARNING:** Do not use the machine within range of other people unless they are wearing protective clothing.
- **WARNING:** Inadequate extension cords can be dangerous. If an extension cord is used, it should be of watertight construction and the connection should

be kept dry and off the ground. It is recommended that this is accomplished by means of a cord reel which keeps the socket at least 60 mm above the ground.

- **WARNING:** The appliance is not designed for connecting to tap water. If necessary, please use only with a water backflow preventer or inlet hose-set approved by IEC 61770.
- Use a fabric reinforced water hose with a commercially available coupling. Minimum diameter 13mm (1/2 inch); minimum length 7.5M.
- **WARNING:** High pressure hoses, fittings and couplings are important for the safety of the machine. Use only hoses, fittings and couplings recommended by the manufacturer.

Operation

- Use the product only in daylight or good artificial light.
- Never operate the product if the supply cord, safety devices, hoses, switch or trigger gun is damaged
- High-pressure jets can be dangerous if subject to misuse. The jet must not be directed at persons, animals, electrical equipment or the appliance itself.
- Before use, check the controls and proper use of the product.
- Before using the product and after any impact, check for signs of wear or damage and repair as necessary.
- **WARNING:** This machine has been designed for use with the cleaning agent supplied or recommended by the manufacturer. The use of other cleaning agents or chemicals may adversely affect the safety of the machine.

- Always disconnect the product from the power supply:
  - When leaving the product unattended.
  - Before clearing a blockage.
  - Before checking, cleaning or working on the product.
  - When the cord becomes damaged or tangled.
  - Whenever the product starts vibrating abnormally.
- **WARNING:** Do not direct the jet against yourself or others in order to clean clothes or footwear.
- Vehicle tyres/tyre valves are susceptible to damage from the high-pressure jet and may burst .The first indication for this is a discolouration of the tyre. Damaged vehicle tyres/tyre valves are perilous. Keep a minimum jet distance of 30cm during cleaning.
- **WARNING:** Risk of explosion - Do not spray flammable liquids.
- **WARNING:** There is a risk of kickback and sudden torque load against the jet spray when the spray gun is opened. Ensure that you have stable footing and that you are holding the gun securely, otherwise you could injure yourself or other people.
- Never use replacement parts or accessories not provided or recommended by the manufacturer.
- **WARNING:** Do not use the appliance if the supply cable or any other important parts of the appliance are damaged, e.g. safety devices, high-pressure hoses or the trigger gun.
- Avoid using the product in bad weather conditions especially when there is a risk of lightning.

- If the cord becomes damaged during use, disconnect the cord from the supply immediately. DO NOT TOUCH THE CORD BEFORE DISCONNECTING THE SUPPLY.
- Do not use the product if the cord is damaged or worn.
- Do not expose the product to rain.

Maintenance and storage

- Disconnect the product from the power supply (i.e. remove the plug from the power supply or the battery pack) and check for damage after use.
- Disconnect the product from the power supply (i.e. remove the plug from the power supply or the battery pack) before carrying out maintenance or cleaning work.
- Leave the hose connected to the machine and spray gun while the unit is pressurised. It is dangerous to detach the hose while the unit is pressurised.
- Use only the manufacturer’s recommended replacement parts and accessories.
- Inspect and maintain the product regularly. Have the product repaired only by an authorised service centre or similar qualified specialist.
- When not in use, store the product out of the reach of children.

Vibration and noise reduction

To reduce the impact of noise and vibration emission, limit the time you use the machine, use low-vibration and low-noise operating modes as well as wearing personal protective equipment.

Take the following points into account to minimise the vibration and noise exposure risks:

- Only use the product as intended by its design and these instructions.
- Ensure that the product is in good condition and well maintained.
- Keep a tight grip on the handles/gripping surface.
- Maintain this product in accordance with these instructions and keep it well lubricated (where appropriate).
- Plan your work schedule to spread any high vibration tool use across a longer period of time.

ATTENTION

Familiarise yourself with the use of this product by means of this instruction manual. Memorise the safety directions and follow them to prevent risks and hazards.

- **Always be alert when using this product, so that you can recognise and handle risks early.** Fast intervention can prevent serious injury and damage to property.
- **Switch off and disconnect from the power supply if there is any malfunction.** Have the product checked by a qualified specialist and repaired if necessary, before the next use.

Residual risks

Even if you are operating this product in accordance with all the safety requirements, potential risks of injury and damage remain. The following dangers can arise in connection with the structure and design of this product:

- Health defects resulting from vibration emission if the product is being used over long periods of time or not adequately managed and properly maintained.
- Injuries and damage to property due to broken application tools or the sudden impact of hidden objects during use.
- Danger of injury and property damage caused by flying objects.

WARNING! This product produces an electromagnetic field during operation! This field may under some circumstances interfere with active or passive medical implants! To reduce the risk of serious or fatal injury, we recommend persons with medical implants to consult their doctor and the medical implant manufacturer before operating this product!

CAUTION: Safety installations serve the protection of the user and may not be modified or bypassed.

PRODUCT SAFETY WARNINGS

Appliance switch
The appliance switch prevents unintentional operation of the appliance.

Lock trigger gun
This lock locks the lever of the trigger gun and prevents the inadvertent start of the appliance.

Overflow valve with pressure switch
The overflow valve prevents the permissible working pressure from being exceeded. If the lever on the trigger gun is released the pressure switch turns off the pump, the high pressure jet is stopped. If the lever is pulled the pump is turned on again.

Flow monitors
DO NOT alter the original diameter of the spray head nozzle - HAZARDOUS ALTERATION OF OPERATING PERFORMANCE.

SYMBOLS

Safety symbols
The purpose of safety symbols is to attract your attention to possible dangers. The safety symbols and the explanations with them require your careful attention and full understanding. The symbol warnings do not, by themselves, eliminate any danger. The instructions and warnings they give are no substitutes for proper accident prevention measures.

SYMBOLS

WARNING: Be sure to read and understand all safety instructions in this operator's manual, including all safety alert symbols such as **"DANGER"**, **"WARNING"**, and **"CAUTION"** before using this tool. Failure to follow all instructions listed below may result in electric shock, fire and/or serious personal injury.

SAFETY ALERT SYMBOL: Indicates **DANGER**, **WARNING**, or **CAUTION**. May be used in conjunction with other symbols or pictographs.

Symbol meaning
This page depicts and describes safety symbols that may appear on this product. Read, understand and follow all instructions on the machine before attempting to assemble and operate.

To reduce the risk of injury, user must read instruction manual carefully.

WARNING: Never direct discharge stream at persons, animals, the unit or any other electric components.

SYMBOLS

Disconnect the mains plug immediately if the cable is damaged, has been badly twisted or is completely cut through. Also disconnect the mains plug when the machine is left unattended.

Double insulation.

Appliance not suitable for connection to the potable water mains (kitchen tap).
Water that has flown through backflow preventers is considered to be undrinkable.
The appliance is not intended to be connected to an indoor tap. If necessary, please use only with a water backflow preventer or an inlet hose-set approved by IEC 61770.

Waste Disposal and Environmental Protection!
Recycle the tool, accessories and packaging at a recycling centre in line with local recycling regulations.
Electrical appliances do not belong in domestic waste.

L_{WA} 92 dB

Guaranteed sound power level value in 92 dB.

CE

The product complies with the applicable European directives and an evaluation method of conformity for these directives was done.

TECHNICAL DATA

Input voltage rating		230-240 V~, 50 Hz
Input power		1800 W
Working pressure		9 MPa
Max pressure		13.5 MPa
Flow rate		4.83 l/min
IP number		IPX5
Safety class		Class II
Inlet pressure		0.6 MPa
Supply water temperature (max.):		40 °C
Measured sound pressure level (L_{pA})		77 dB(A), K=3 dB(A)
Measured sound power level (L_{wA})		89 dB(A), K= 3 dB(A)
Guaranteed sound power level (L_{wA})		92 dB(A)
Vibration		<2.5 m/s^2, k=1.5 m/ s^2
Weight		8.5 kg

The sound values have been determined according to the noise test code given in EN 60335-2-79, using the basic standards EN ISO 11203 and EN ISO 3744.

The sound intensity level for the operator may exceed 80dB(A) and ear protection measures are necessary.

The declared vibration value has been measured in accordance with a standard test method (according to EN 60335-2-79) and may be used for comparing one product with another. The declared vibration value may also be used in a preliminary assessment of exposure.

WARNING: Depending on how the product is actually used, the vibration values can differ from the declared total! Adopt proper measures to protect yourself against vibration exposures. Take the whole work process, including times the product is running under no load or switched off, into consideration. Proper measures include, among others, regular maintenance and care of the product and its attachments, keeping hands warm, regular breaks and proper planning of work processes.

DESCRIPTION OF PRODUCT

Parts description (See FIG.A)

1. Carrying handle
2. Detergent bottle
3. Power cable
4. Outlet
5. Water intake
6. ON/OFF switch
7. High pressure hose
8. Needle
9. Coupling element for water connection
10. Turbo nozzle
11. High pressure nozzle
12. Spray gun
13. Tip lance

Check the delivery parts (See FIG.B)

Remove the machine from its packaging carefully and make sure that the following parts are present:

a. High pressure washer
b. Spray gun
c. Tip lance
d. Nozzle
e. User manual
f. Coupling element for water connection

WARNING: If any parts are damaged or missing, do not operate this tool until these parts are replaced. Failure to heed this warning could result in serious personal injury.

NOTE: Always recycle the packaging in accordance with local recycling guidelines.

INSTALLATION

WARNING: Pull out mains plug before carrying out any work on the equipment and use only original parts.
Before starting any cleaning task, it is important to inspect the area for objects that could create a hazard. Remove any objects from the work area that could be tripped over, such as toys or outdoor furniture. Ensure that all doors and windows are closed tightly.

Take out pressure hose from store housing. (Fig. C)

Open the store housing and take out pressure hose

Connect the hose to machine's outlet. (Fig. D)

Screw the high pressure hose firmly to the machine's outlet.

Connect the hose and spray gun.

Install the high pressure hose firmly onto the spray gun. (Fig. E)
1. Press and hold the button near the trigger.
2. Insert the high pressure into the spray gun.

Then install the tip lance and selected nozzle onto the spray gun. (Fig. F)

Connect garden hose and transfer adaptor. (Fig. G&H)

Install the transfer adaptor onto the inlet adaptor and then attach the hose to it.

Connect to water supply (Fig. I)

In keeping with current regulations a pressure washer must never be operated from the drinking water mains supply without a controllable backflow preventer. A suitable backflow preventer in conformity with EN 12729 type BA must be used. Water that has passed through a backflow preventer is classified as undrinkable.

NOTE: A backflow preventer is available from specialist retailers.

Attach garden hose to water supply and turn water valve on fully on position.

Take out power cord and connect to socket. (Fig. J)

1. Open the side store housing and take out power cord
2. Insert the mains plug into the socket.

WARNING: Wear suitable clothing, ear and eye protection when working with the equipment. Ensure that the equipment is functional before each use. Ensure that the mains voltage value matches the label on the equipment. Check the condition of the machine:
– Check machine for visual defects.
– Check that all parts of the machine have been securely fitted.
– Check that the water connector and the high-pressure hose are tight.

Starting and stopping

NOTE: Put the high pressure washer on an area of flat ground. Stand in a secure and stable position.

Starting:

1. Open the water inlet valve.
2. To switch the machine on, set the ON/OFF switch to ON. (Fig. K)
3. Unlock the safety trigger on the spray gun and press the trigger until there is a steady stream of water. (Fig. L)

Stopping:

1. Release the trigger. Lock the safety trigger on the spray gun.
2. To switch the machine off, set the ON/OFF switch to OFF.
3. Close the water inlet valve.

CAUTION: Risk of machine damage!
Never operate the machine without water inlet as dry running may damage the pump. Use a water filter if the inlet water is contaminated.

Working with the electric high pressure washer

Risk of fatal injury!
Use special care when cleaning tyres. Vehicle tyres/tyre valves may become damaged or burst when handled improperly. The first sign of damage is discolouration. Damaged vehicle tyres/tyre valves pose a life-threatening risk. Keep the jet at a distance of at least 30 cm!

Risk of fatal injury!
The high-pressure jet may be dangerous when handled improperly. The jet must not be directed towards living beings (persons, animals), live equipment or the machine itself.

Application

High pressure working. (Fig. M)

WARNING: Be prepared for the recoil force of the emitted water jet! Ensure that you are standing firmly and that you are holding the gun securely, otherwise you could injure yourself or other people.

Hold the hand-held spray gun and the jet tube firmly with both hands. Unlock the safety button and press the trigger on the handheld spray gun.
The high-pressure pump starts running as soon as you operate the hand-held spray gun.
The high-pressure pump stops running as soon as you release the trigger on the hand-held spray gun.

CAUTION: Jet spray adjustment is very aggressive. Do not adjust while spraying.

If there is still air in the equipment, please proceed as follows:

Bleed the supply hose:

1. Remove the quick connection for the garden hose adapter on the water connection and open the water tap until water with no bubbles emerges.
2. Close the water tap.
3. Connect the supply hose to the equipment with the aid of the quick connection for the garden hose adapter
4. Fully open the water tap.

Bleed the equipment:

5. Switch on the equipment at the on/off switch until the pressure has built up.
6. Switch off the equipment at the on/off switch.
7. Depress the start lever on the spray gun until the pressure is released.
8. Please repeat steps 5-7 several times until there is no further air in the equipment.

Using the detergent bottle. (Fig. N)

1. Stop the machine.
2. Add detergent to the bottle.

Use the Turbo nozzle

The rotary lance can protect painted wood and UPVC surfaces as the water continuously rotates resulting in a lower impact on the surface. It can be used to remove particularly stubborn dirt.

MAINTENANCE AND STORAGE

Overview of cleaning

1. Clean the machine. Wipe the unit with a slightly damp cloth. Do not clean the machine using a high-pressure water jet.
2. Clean the high-pressure nozzle with needle. (Fig. O)

The pressure washer is equipped with a water filter to protect the pump. If the filter is not kept clean, the water flow to the machine will be restricted and the pump may be damaged.

1. To clean water filter, remove transfer adapter and take out filter.
2. Rinse filter until it is free of debris and blockages.
3. Replace the filter and inlet adapter.

Maintenance

This machine is maintenance-free.

Storing

Store the machine in a dry and well ventilated area.
When the machine is not going to be used for an extended period of time, ensure to remove the cleaning agent and drain all remaining water from the hose.

Transport

If shipping, use the original packaging wherever possible.

Disposing of the machine

This machine must not be disposed of in household rubbish. You must dispose of such old electrical and electronic appliances separately.
Please check with your local authority how to correctly dispose of your old machine.

Disposing of the packaging

The packaging consists of cardboard and correspondingly marked sheets that should be recycled. Ensure to recycle this packaging in line with local recycling guidelines.

TROUBLESHOOTING

WARNING: Before performing any repair work, always ensure that the mains power cable has been unplugged.

WARNING: Always wear heavy duty gloves when adjusting or cleaning, especially when handling sharp objects.

Symptom	Cause	Solution
Motor does not run when “ON” (I), fully connected and trigger depressed.	ON/OFF switch is in the “OFF” (O) position.	Turn switch to the “ON” (I) position.
	Power cord is not plugged in.	Plug in power cord.
	Electrical outlet does not supply adequate power.	Try a different outlet.
	Tripped pressure washer thermal protector.	Allow to cool and restart unit.
Unit does not reach high pressure.	Water supply is restricted.	Check garden hose for kinks, leaks and blockage.
	Not enough water supply.	Open water source fully.
	Water inlet filter is clogged.	Remove filter and rinse in warm water.
	Nozzle is in low pressure	Adjust the nozzle to high pressure position.
	Pump is sucking air.	Check that hoses and fittings are airtight. Turn OFF machine and purge pump by squeezing trigger gun until a steady flow of water emerges through the nozzle.
	Not enough inlet water supply.	Turn water on fully. Check garden hose for kinks, leaks or blockage.
Output pressure varies ON/OFF switch is in the “OFF” (O) position.	Pump is sucking air.	Check that hoses and fittings are airtight. Turn OFF machine and purge pump by squeezing trigger gun until a steady flow of water emerges through the nozzle
	Water inlet filter is clogged.	Remove filter and rinse with warm water.
	Discharge nozzle is obstructed.	Blow out or remove debris with a fine needle.
	Calcified gun, hose or power nozzle.	Run distilled vinegar through detergent tank.

TROUBLESHOOTING

Symptom	Cause	Solution
Detergent is not working.	Detergent container is empty.	Add more detergent.
	Detergent bottle or suction tube not properly connected.	Check connections.
	Detergent is too thick.	Dilute detergent.
	Filter on detergent suction tube is clogged.	Run warm water through filter to remove build-up.
	Damaged or clogged detergent suction tube.	Remove obstruction or replace detergent suction tube.
	Nozzle is in high-pressure position.	Use low pressure (black) tip.
	Discharge nozzle is obstructed.	Blow out or remove debris with a fine needle.
	Loose fittings.	Tighten fittings.
Garden hose connection leaks.	Missing / worn rubber washer.	Insert new washer.
	Spray nozzle not properly attached.	Ensure quick-connect wand is attached securely. Ensure spray tip is clicked in securely.
Spray wand, extension, or nozzle leaks.	Broken O-ring or plastic insert.	Call the customer service centre.
	Pump is sucking air.	Check that hoses and fittings are airtight. Turn off machine and purge pump by squeezing trigger gun until a steady flow of water emerges through the nozzle.
Pump is noisy.	Water filter is clogged.	Remove water filter and rinse in warm water.
	Loose fittings.	Check that all fittings are tight.
Motor buzzes but fails to run.	System has residual pressure.	Turn unit OFF, squeeze trigger on spray wand to release pressure and then turn unit ON.
	Voltage loss due to extension cord.	Unplug any extension cords attached and plug the unit directly into the outlet.
	Pressure washer not used for long periods.	Call the customer service centre.
Motor buzzes but fails to run. (continued)	Residual friction among components. Unit might hum.	Disconnect water supply and power ON for 2 to 3 seconds, repeat or until the motor starts.
	Water supply is OFF.	Turn ON water supply.
No water.	Kink in the garden hose.	Remove kink in garden hose.

DECLARATION OF CONFORMITY

To the provisions of Council Directives

We
SUMEC UK Co.,Ltd.
Unit A&B, Escrick Business Park
Escrick, York YO 19 6FD

Declare that the product:
Machine Description: 1800W High Pressure Washer
Q1W-SP09-1800 / EW U13
Function: Clean the walls of buildings etc.

Complies with essential health and safety requirements of the following directives:
Machinery Directive 2006/42/EC
Electromagnetic Compatibility Directive 2014/30/EU
RoHS Directive 2011/65/EU
Noise Emission in the Environment by Equipment for Use Outdoors Directive 2000/14/EC amended by 2005/88/EC
Conformity Assessment Procedure as Per Annex V
Measured Sound Power Level: 89 dB (A)
Declared Guaranteed Sound Power Level: 92 dB (A)

Standards and technical specification referred to:
EN 60335-2-79: 2012
EN 60335-1: 2012/A11: 2014
EN 62233: 2008
EN 55014-1: 2017
EN 55014-2: 2015
EN 61000-3-2: 2014
EN 61000-3-3: 2013

Authorized Signatory
Date: 11.10.2017

Signature: M. Hall
Place: York
Name: Mariana Hall
General Manager

SUMEC UK
Unit A&B Escrick Business Park
Escrick, York
YO19 6FD