EXPLODED DRAWING

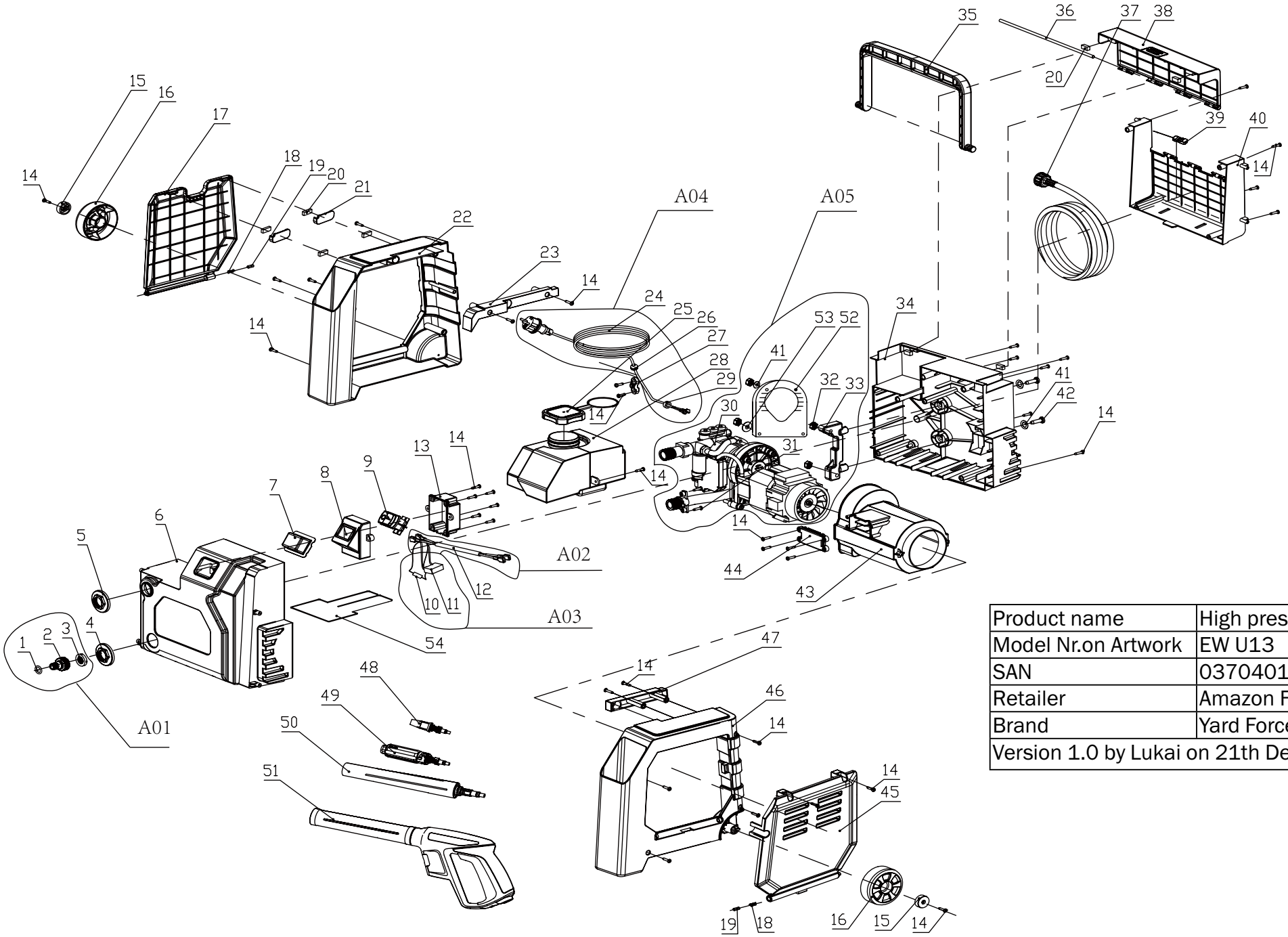

Product name	High pressure washer-corded
Model Nr.on Artwork	EW U13
SAN	0370401179ZB
Retailer	Amazon FR
Brand	Yard Force
Version 1.0 by Lukai on 21th Dec, 2017	

COLOR SCHEME